Using the In-Situ® Aqua TROLL® 100/200 Conductivity Sensor with the HOBO® RX3000 Station

This application note describes how to connect and operate the In-Situ Aqua TROLL 100 or 200 (analog output) with the HOBO RX3000 station. The sensor is compatible with any RX3000 configuration (cellular, Ethernet, or Wi-Fi) that is equipped with the optional four-channel analog input module (RXMOD-A1). It is suggested that a 6-watt solar panel be used to ensure that the RX3000 battery is kept charged properly. **Some type of charging device must be connected to the RX3000 station when using external sensors or premature battery discharge will occur, which could cause the RX3000 station to stop recording or transmitting data.**

Note: This sensor is a multi-function device that has the ability to be configured in a variety of ways. This document is written to explain how to configure this sensor to output a 4-20mA signal that represents salinity, which will be logged by the HOBO RX3000 station for transmission to Onset's HOBOlink website. For more information on this sensor, see the In-Situ product manual at https://in-situ.com/pub/media/support/documents/Aqua_TROLL_100-200_Manual.pdf

For more information on the RX3000 station, see http://www.onsetcomp.com/products/data-loggers/rx3000.

Summary of Steps

The steps required are summarized below followed by sections explaining each of the HOBO-specific steps in more detail.

1. Install the Win-Situ® software. Follow the sensor manufacturer's instructions at
   https://in-situ.com/pub/media/support/documents/Aqua-TROLL-100-200_QSG.pdf
   If you need to download the Win-Situ software, it can be found here:
   https://in-situ.com/support/documents/win-situ-5-software/
2. Establish communications between the sensor and computer and then configure the sensor for analog output of the desired parameter. We used the optional In-Situ Communications Device Kit to communicate between the sensor and computer.
   https://in-situ.com/pub/media/support/documents/Con_TROLL_Pro_Install_Manual_-_After_May_2012.pdf
3. If sensor calibration is required, follow the In-Situ sensor calibration procedure as called out in the Aqua TROLL Quick Start Guide.
4. Disconnect the sensor cable from the communication device and connect the cable to the RX3000 as shown in the next sections.
5. Configure the HOBO RX3000 for use with the sensor via HOBOlink web-based software as shown in the next sections.

Establishing Communications and Configuring Win-Situ

Follow the In-Situ Communication Device Instruction Sheet between the sensor and the Win-Situ software.

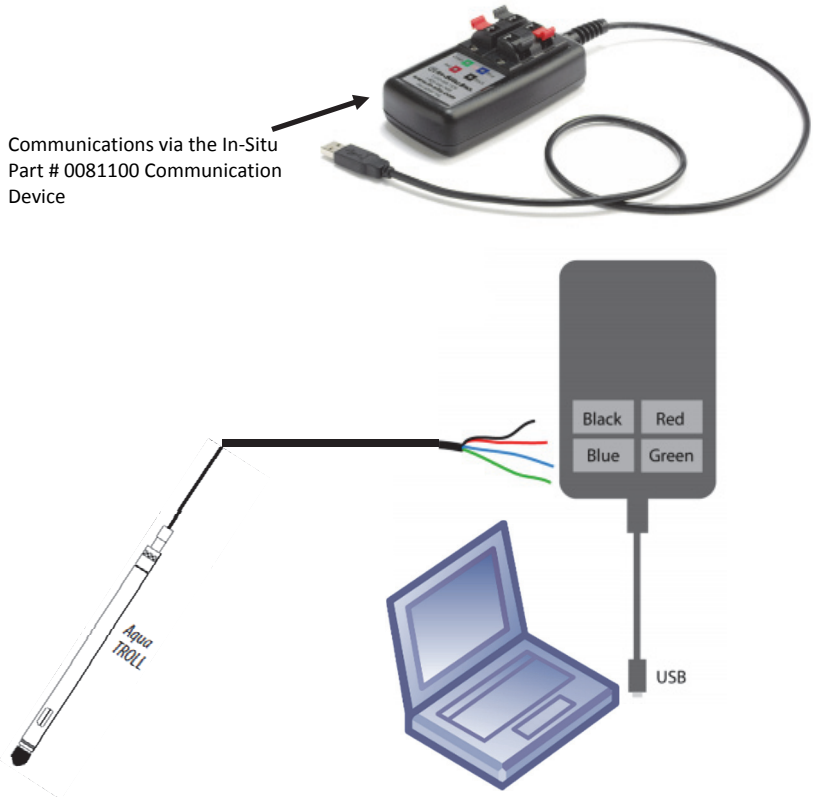

Once communications are established, select Device Setup from the View menu in the Win-Situ software. Click Analog Setup to configure the sensor for use with the RX3000 station via the RXMOD-A1 analog input module.

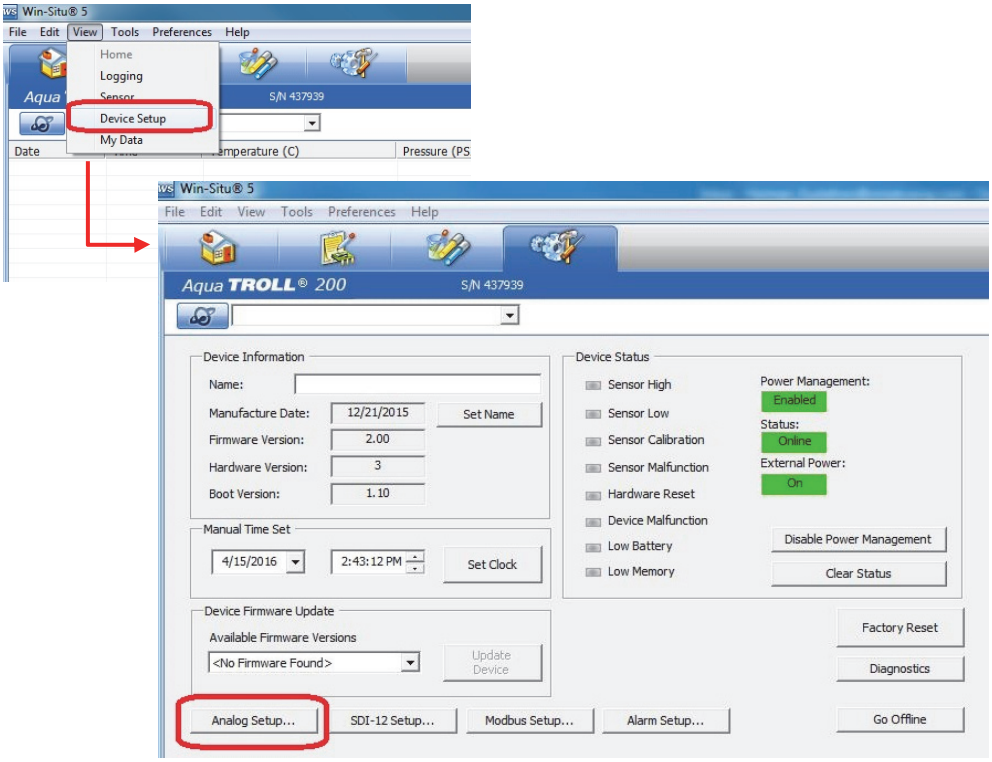

Select the measurement you wish to monitor and the range of measurement desired for your application (for this example, we used Salinity with a range of 0 - 42 PSU). You can enter a tighter measurement range to get better resolution. If sensor calibration is required, follow the In-Situ sensor calibration procedure as called out in the Aqua TROLL Quick Start Guide.

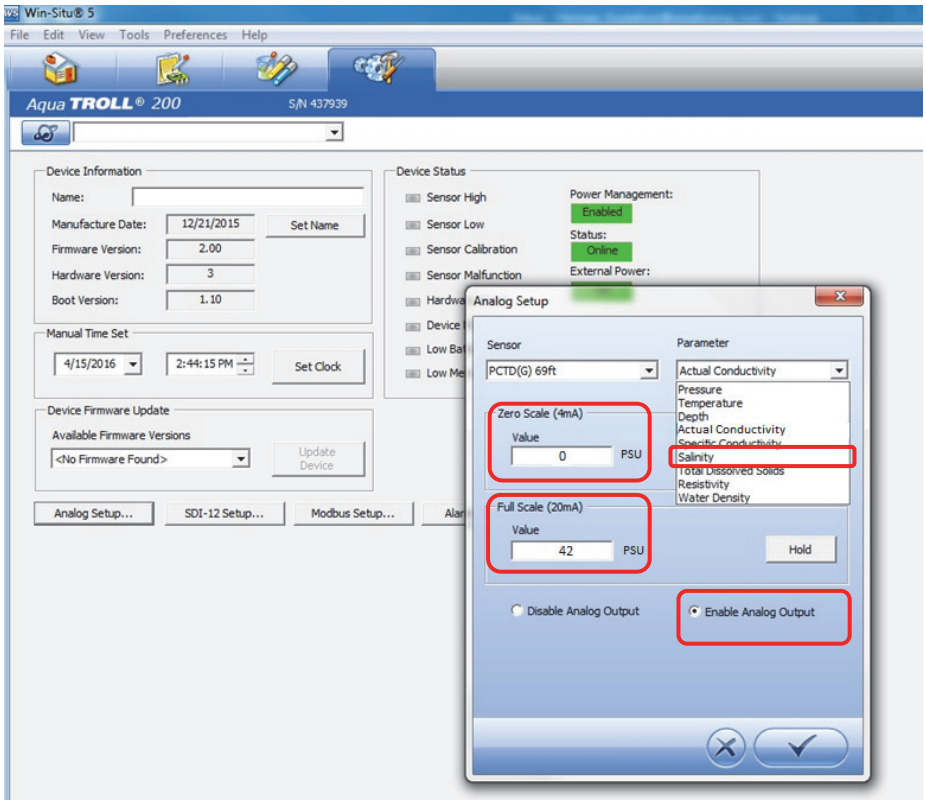

Wiring to the RX3000 Analog Module (RXMOD-A1)

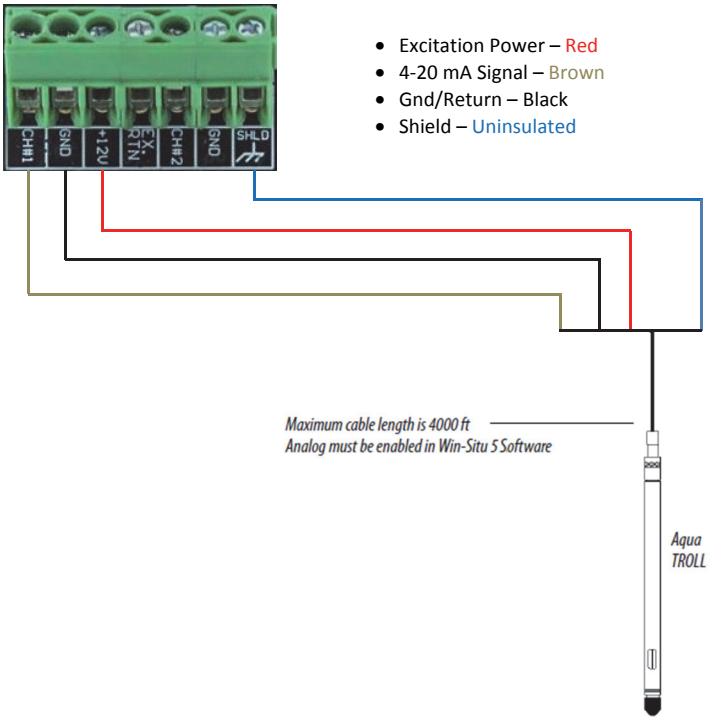

- Excitation Power – Red
- 4-20 mA Signal – Brown
- Gnd/Return – Black
- Shield – Uninsulated

HOBOlink Analog Module Configuration

Register the RX3000 station with HOBOlink as described in the RX3000 Quick Start at http://www.onsetcomp.com/manuals/rx3000-qsg. Choose a logging interval for the analog module that meets the needs of your application and is supported by your RX3000 data plan (we chose 5 minutes in the following example). Also be sure to use a warm-up time of at least one second, which will save battery power and allow the sensor time enough to stabilize for each logged data point.

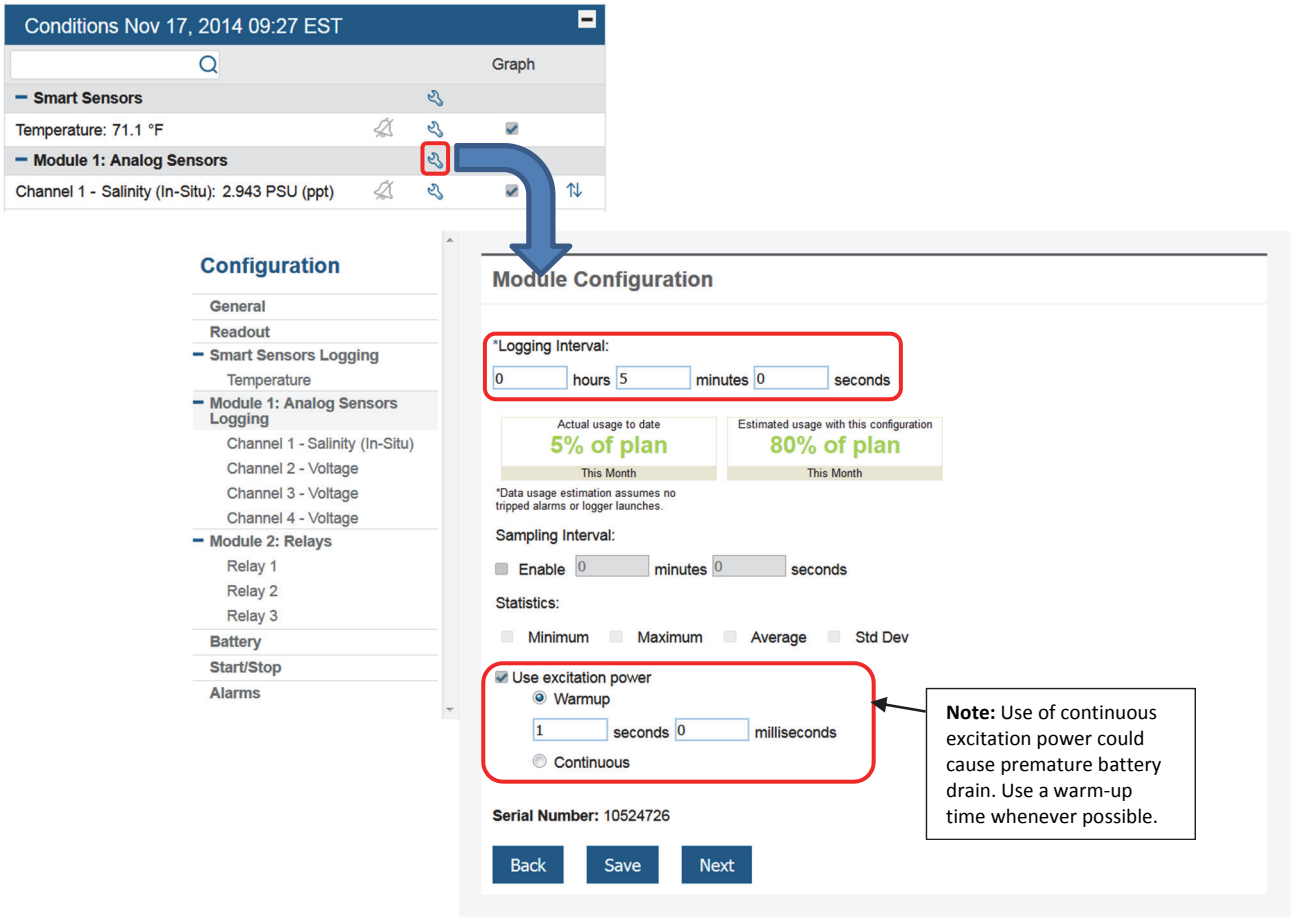

Configure the analog channel as shown in this example.

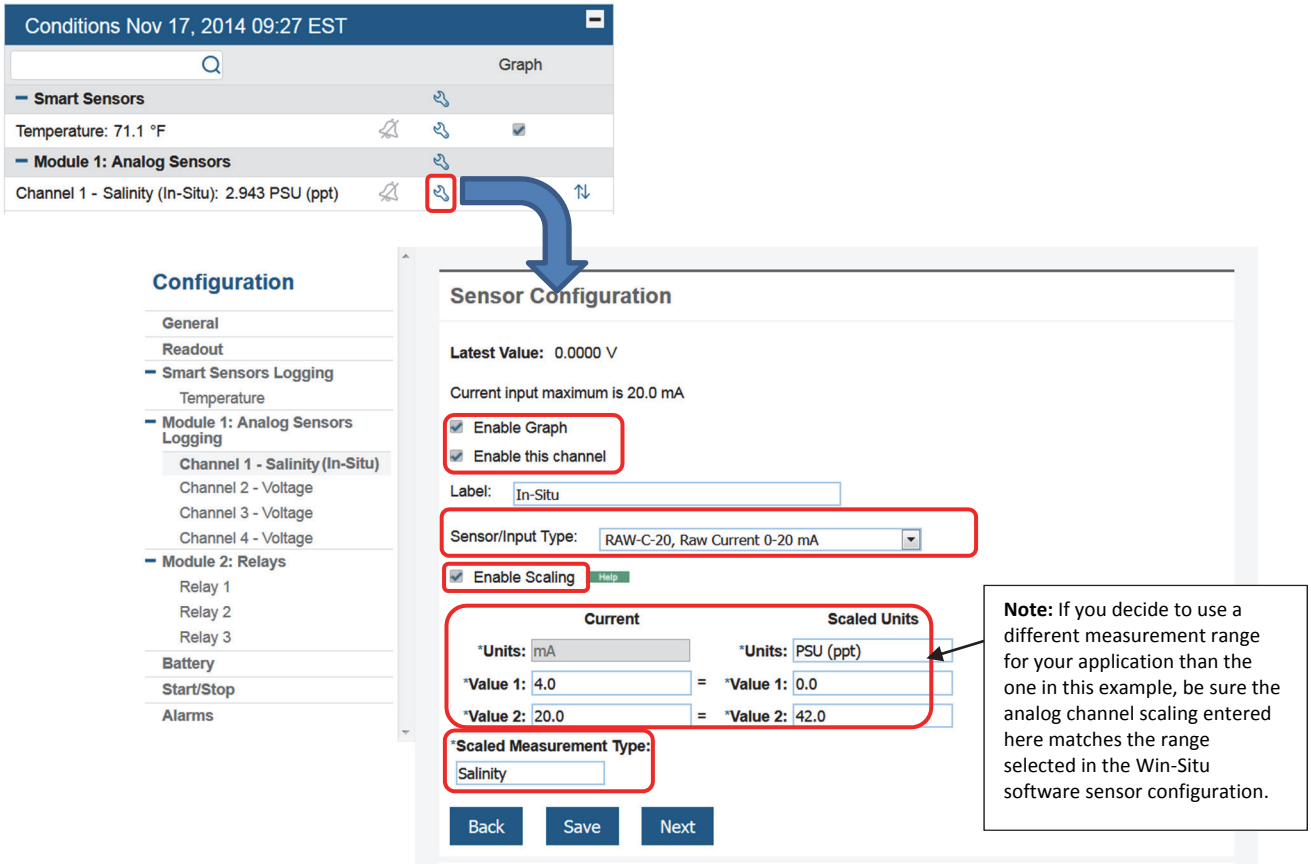

© 2016–2017 Onset Computer Corporation. All rights reserved. Onset, HOBO, and HOBOlink are registered trademarks of Onset Computer Corporation. In-Situ, TROLL, and Win-Situ are registered trademarks or trademarks of In-Situ Inc., Fort Collins, CO USA. All other trademarks are the property of their respective companies.